Multiple Modes for the Operation of a Binary Distillation Column

J. Christian Schön and Bjarne Andresen*,†

Ørsted Laboratory, University of Copenhagen, Universitetsparken 5, DK-2100 Copenhagen Ø, Denmark

We investigate whether it is possible to operate a given binary distillation column with several different reflux ratios (heat flow rates) while achieving the same purity and amount of distillate. We find that even for small variations in the plate efficiency vs flow rate several distinct values of the reflux ratio exist that achieve the same output of the column.

I. Introduction

Distillation has been a technological process of great interest for several millennia, and much heuristic, experimental, and theoretical knowledge about the behavior of distillation columns has been obtained [*1*−*4*]. Since distillation is such a common process in science and engineering, the question of efficiency and subsequent optimization of the distillation process has often been raised. Recent investigations are concerned with minimizing the entropy production in distillation [*5*−*7*] and with the control of distillation columns [*8*]. The field is still very much active, and the final answer is by no means found. Especially economic considerations have driven the quest for higher efficiency and optimal use of resources [*1*], and an economic optimization is always performed before a column is actually built and taken into operation.

However, for a given ordinary distillation column there remains for all practical purposes only one control parameter that can be adjusted, once the amount and purity of the feed and distillate have been prescribed. This quantity is the reflux ratio at the condenser. It translates into the amount of heat flow through the column which is proportional to the energy consumption and entropy production during the process.

Thus it is of great interest, not only for economic reasons but also for reasons of control, to know whether there might be several values of the heat flow (reflux ratio) that allow the operation of a given column while producing a desired purity of the distillate. In this paper we address this issue generally and show that fairly rapid changes in the plate efficiency vs flow rate, even of small magnitude, may result in the existence of multiple operating modes. A related study [*9*] of multiplicity in a multicomponent distillation was based on global material balances with several solutions.

After presenting qualitative arguments for the existence of such multiple operating modes in section II, we show their presence explicitly for the case of an ideal binary distillation column in sections III and IV. Finally, in section V, the effect of nonidealities is discussed, and comparison is made to other efficiency studies primarily based on entropy production.

II. Qualitative Arguments for the Existence of Multiple Operating Modes

A distillation process using perfect plates (or, at least, plates with constant efficiency) will, for a given number of plates N_c in the column, exhibit only one possible reflux ratio R (heat flow Q) that can produce the desired distillate, since the number of required plates $N(R)$ decreases monotonically with R [*3*]. The distillate flow D, the final purity x_D, and the initial feed concentration x_F are assumed to be fixed for a given process.

As indicated in the Introduction, the cause of the possible existence of multiple operation modes lies in the dependence of the plate efficiency on the heat and/or material flows. Clearly, if the plate efficiency approaches zero with increasing reflux ratio, then the number of plates necessary to achieve a certain amount of purified distillate will approach infinity in the limit of zero plate efficiency. Similarly, an infinite number of plates is necessary for reflux ratios approaching the minimum reflux ratio [*3*]. There must therefore exist a minimum in the number of required plates, N_{min}, for some reflux ratio between R_{min} and infinity. If the column is built with a number of plates $N_c > N_{min}$, then there are obviously two reflux ratios for which this column will produce the same purity.

However, the second solution will in general occur at such large values of the reflux ratio that one would never realistically contemplate running a column in that regime. Thus for practical purposes the question is "Can multiple solutions associated with minima in the curve $N(R)$ (or $N(Q)$) occur in the regime of reflux ratios that is commonly employed for the economically optimal operation of the column?"

The answer to this question is affirmative. Any rapid change in the plate efficiency, even of small magnitude, can introduce a local minimum in the required number of plates vs reflux ratio (heat flow) curve for given fixed input and output concentrations. Since most distillation columns are constructed of discrete plates (stages), the number of necessary plates for the actual operation will necessarily change in steps of unity as the reflux ratio R is varied. Thus the actual curve $N_{obs}(R)$ of necessary plates will be an integer step function approximating the continuous curve $N(R)$. As a consequence many small local minima in $N(R)$ may not be noticeable in $N_{obs}(R)$ if they fall well within a single step of $N_{obs}(R)$. However, if the local minimum of the contiuous $N(R)$ curve happens to dip below an integer value, even ever so slightly, the integer $N_{obs}(R)$ curve will also display two values of R corresponding to a particular number of plates, separated by a (small) region with a value of $N_{obs}(R)$ one higher (cf. e.g. Figure 2 where the horizontal dashed line would correspond to that particular number of plates). These two reflux ratios (or the corresponding heat flows Q_1 and Q_2) constitute the multiple solutions mentioned above.

In order to go beyond these purely qualitative arguments, we will in the next two sections calculate $N(Q)$ for an ideal distillation process with plates whose efficiency $P(Q)$ decreases with increasing heat flow Q.

† Phone +45-35320470, fax +45-35320460, e-mail andresen@fys.ku.dk.

S0888-5885(95)00675-0 CCC: $12.00 © 1996 American Chemical Society

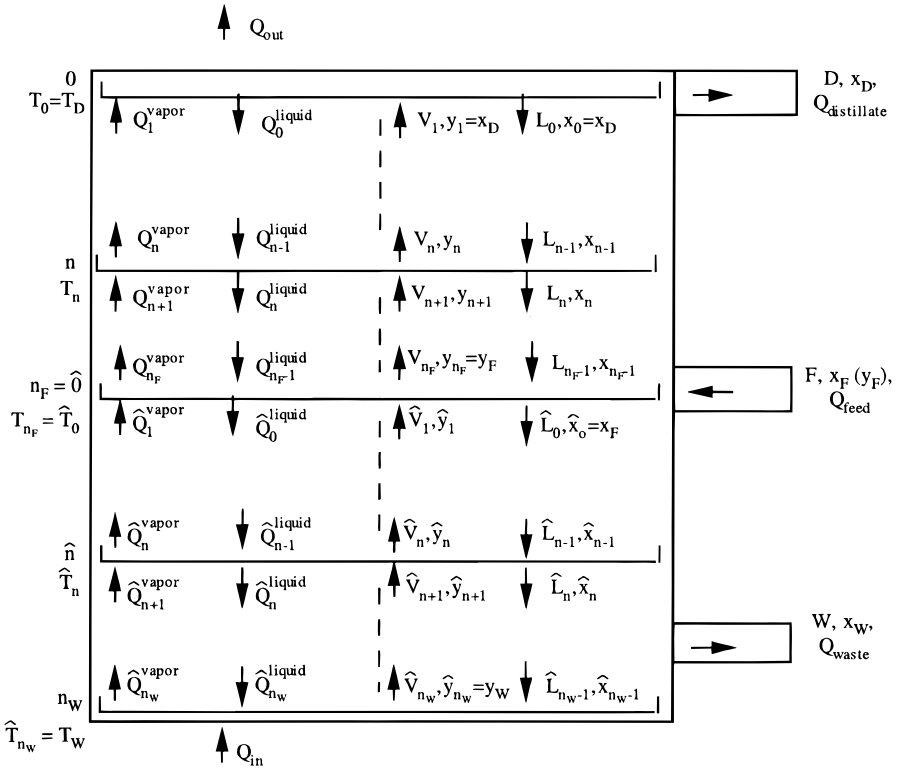

Figure 1. Sketch of the heat (left half) and mass flows (right half) in a distillation column. Two generic plates in the rectification and stripping section are shown explicitly (n and $\hat{n}$), together with the plates where distillate, waste, and feed are extracted and added. $Q^{\text{vapor}} \equiv$ heat flow carried by vapor, $Q^{\text{liquid}} \equiv$ heat flow carried by liquid, $V \equiv$ mass flow carried by vapor, and $L \equiv$ mass flow carried by liquid. Quantities with/without a caret correspond to the stripping/rectification part of the column, respectively.

III. Equations Describing a Distillation Column

We are not interested in taking into account specific details of the materials that have to be separated nor general imperfections of distillation columns like pressure drops, heat leaks, etc. beyond including these design effects into the plate efficiency. For our purposes any perfect ideal distillation column can be described by demanding that mass conservation of the components and enthalpy conservation hold at each plate. We will consider the case of binary distillation of two ideally mixed substances. We assume no heat of mixing or radiation losses and a non-negligible pressure drop. In addition, we assume that all the plates exhibit the same plate efficiency as a function of heat flow, i.e. the small variations in liquid/vapor flow over the length of the column do not matter as far as the plate efficiency is concerned (see section V for the case that the plate efficiency depends on the material flows instead).

We count plates from the top, i.e. for the rectifying section the condenser is plate 0 and feed is on plate n_F, while for the stripping section 0 is the feed plate and n_W corresponds to the boiler. Expressions with a caret refer to the stripping part of the column.

The perfect (plate efficiency equals one), ideal (eq 4c below applies) binary distillation column operation can be described by the following transfer equations [3] (see Figure 1 for the traditional definition of the variables):

$$V_n + L_n = V_{n+1} + L_{n-1} \quad \text{(overall mass conservation)} \tag{1}$$

$$y_n V_n + x_n L_n = y_{n+1} V_{n+1} + x_{n-1} L_{n-1} \quad \text{(component one mass conservation)} \tag{2}$$

$$Q_n^{\text{vapor}} + Q_n^{\text{liquid}} = Q_{n+1}^{\text{vapor}} + Q_{n-1}^{\text{liquid}} \Leftrightarrow V_n[y_n(H_1 + C_{V1}T_n) + (1 - y_n)(H_2 + C_{V2}T_n)] + L_n[x_n C_{L1} T_n + (1 - x_n)C_{L2}T_n] = V_{n+1}[y_{n+1}(H_1 + C_{V1}T_{n+1}) + (1 - y_{n+1})(H_2 + C_{V2}T_{n+1})] + L_{n-1}[x_{n-1}C_{L1}T_{n-1} + (1 - x_{n-1})C_{L2}T_{n-1}] \quad \text{(enthalpy conservation)} \tag{3}$$

V_n and L_n describe the vapor and liquid flows leaving plate n, y_n is the fraction of component one in the vapor leaving plate n, while x_n is the fraction of component one in the liquid that leaves plate n. H_1 and H_2 are the heats of vaporization of components one and two, while C_V and C_L are the specific heats of the vapor and liquid phase, respectively. The expression describing the contribution of the specific heats to the total enthalpy of the substances is, of course, rather simplified. The justification is that we are only interested in that part which changes noticeably over the temperature range we consider. Consequently, we have dropped several terms in the usual expression which are essentially constant.

The vapor-liquid equilibrium on the plates follow

$$T_n = T_{\text{eq}}(y_n) \tag{4a}$$

$$T_n = T_{\text{eq}}(x_n) \tag{4b}$$

$$y_n^{\text{eq}}(x_n) = \frac{\alpha x_n}{1 + (\alpha - 1)x_n} \quad \text{(vapor curve)} \tag{4c}$$

Equations 4a−c describe the equilibrium curves of the phase separation diagram of the ideal mixture made up of substances one and two. α is the relative volatility constant, and we choose component one to be purified, i.e. $\alpha > 1$. Note that only two of the three equations (4a−c) are independent.

Finally, the boundary conditions at the condenser, feed-plate, and boiler tie the variables to the exterior reservoirs and fix the overall heat flows:

$$x_0 = y_1 = x_D, \quad V_1 = L_0 + D \tag{4d}$$

$$\hat{x}_0 = x_{n_F} = x_F, \quad \hat{y}_0 = y_{n_F} = y_F\ (=y^{eq}(x_F)), \quad V_{n_F} + \hat{L}_0 = L_{n_F-1} + F + \hat{V}_1 \tag{4e}$$

$$x_{n_W} = x_W, \quad y_{n_W} = y_W\ (=y^{eq}(x_W)), \quad \hat{V}_{n_W} = \hat{L}_{n_W-1} - W \tag{4f}$$

$$Q_{out} + Q_{distillate} + Q_0^{liquid} = Q_1^{vapor} \tag{4g}$$

$$Q_{feed} + Q_{n_F-1}^{liquid} + \hat{Q}_1^{vapor} = \hat{Q}_0^{liquid} + Q_{n_F}^{vapor} \tag{4h}$$

$$Q_{in} + \hat{Q}_{n_W-1}^{liquid} = Q_{waste} + \hat{Q}_{n_W}^{vapor} \tag{4i}$$

The concentrations of component one in the distillate and the waste are given by x_D and x_W, respectively, while x_F and y_F refer to the concentrations in the liquid and vapor at the feed plate, respectively. D, W, and F are the distillate, waste, and feed (typically boiling liquid) flows, respectively. Finally, Q denotes the enthalpy flows carried by the various parts of the system; Q_{in} is the heat added at the boiler, while Q_{out} is the heat extracted at the condenser.

We can now integrate eqs 1−3 and get The constants

$$V_{n+1} = L_n + D, \quad \hat{V}_{n+1} = \hat{L}_n - W \tag{5}$$

$$y_{n+1}V_{n+1} = x_nL_n + x_DD, \quad y_{n+1}\hat{V}_{n+1} = x_n\hat{L}_n - x_WW \tag{6}$$

$$V_{n+1}[y_{n+1}(H_1 + C_{V1}T_{n+1}) + (1 - y_{n+1})(H_2 + C_{V2}T_{n+1})] - L_n[x_nC_{L1}T_n + (1 - x_n)C_{L2}T_n] = Q\ (=\text{constant}) \tag{7}$$

$$\hat{V}_{n+1}[y_{n+1}(H_1 + C_{V1}T_{n+1}) + (1 - y_{n+1})(H_2 + C_{V2}T_{n+1})] - \hat{L}_n[x_nC_{L1}T_n + (1 - x_n)C_{L2}T_n] = \hat{Q}\ (=\text{constant}) \tag{8}$$

Q and $\hat{Q}$ are conserved quantities of the system, since they represent the heat flows entered into the system at the boiler and the feed, and they can be uniquely related to the reflux ratio $R_n = L_n/D$ at any given plate.

However, this reflux ratio is not constant along the column if the two components carry different enthalpies and the heat capacities are nonzero. In the following we will therefore use instead the constant heat flow Q or rather the heat load per unit of product, $q = Q/D$, where D, the distillate production rate, is fixed for a given process instead of the reflux ratio R, since the reflux ratio is not constant along the column for ϵ and $C_{V,L} \neq 0$. Here we have replaced H_1 and H_2 by their difference $\epsilon \equiv H_1 - H_2$ and $H \equiv H_2$. The case of ϵ and $C_{V,L} = 0$ corresponds to constant material (liquid/vapor) flows, which implies, of course, that R is also constant. Globally, mass and enthalpy conservation are reflected in the following relations:

$$F = D + W, \quad x_FF = x_DD + x_WW, \quad Q_{in} + Q_{feed} = Q_{out} + Q_{distillate} + Q_{waste} \tag{9}$$

From now on we will set the specific heats C_V and C_L equal to zero. This approximation is usually quite justified for $\epsilon \neq 0$, since then the major portion of both the enthalpy flow and the enthalpy exchange at each plate is due to the heat of vaporization. (See section V for a discussion of the problems that may occur when the approximation $C_{V,L} = 0$ is no longer a priori acceptable.) As a consequence the temperature enters the system of difference equations only via the vapor equilibrium equations (4a and 4b). Therefore, T_n can be deduced separately after y_n and x_n have been determined. Thus we need not specify any details of the separation process beyond the assumption of ideal mixtures that is implied by eq 4c.

The plate efficiency is introduced according to the definition [*1*]

$$P_n = \frac{y_n - y_{n+1}}{y^{eq}(x_n) - y_{n+1}} \tag{10}$$

For a column with perfect plates $P_n = 1$, and eq 10 reduces to $y_n = y^{eq}(x_n)$, i.e. the vapor leaving plate n is in equilibrium with the liquid leaving plate n. Combining this expression with eqs 4−7, we find the following difference equation that describes the change in concentration of component one from plate $n + 1$ to plate n in the rectifying section of the column:

$$y_n - y_{n+1} = P_n[y^{eq}(x_n) - y_{n+1}] = P_n[y^{eq}(x_n(y_{n+1}, V_{n+1}(y_{n+1}))) - y_{n+1}] = P_nf(y_{n+1}) \tag{11}$$

where

$$f(y_{n+1}) = (y_n - y_{n+1})_{perfect} = \frac{\alpha[Qy_{n+1} - x_DD(\epsilon y_{n+1} + H)]}{[Q - D(\epsilon y_{n+1} + H)] + (\alpha - 1)[Qy_{n+1} - x_DD(\epsilon y_{n+1} + H)]} - y_{n+1} \tag{12}$$

A similar expression is found for the stripping section. Making the reasonable assumption that all plates have the same plate efficiency as a function of heat flow, we get

$$y_n - y_{n+1} = P(Q)\left(\frac{\alpha[Qy_{n+1} - x_DD(\epsilon y_{n+1} + H)]}{[Q - D(\epsilon y_{n+1} + H)] + (\alpha - 1)[Qy_{n+1} - x_DD(\epsilon y_{n+1} + H)]} - y_{n+1}\right) \tag{13}$$

In order to proceed beyond this result we now recast eq 13 in continuous form, approximating $y_n - y_{n+1}$ by $-\mathrm{d}y/\mathrm{d}n$ to find

$$-\frac{\mathrm{d}y}{\mathrm{d}n} = P(Q)\left(\frac{\alpha[Qy - x_DD(\epsilon y + H)]}{[Q - D(\epsilon y + H)] + (\alpha - 1)[Qy - x_DD(\epsilon y + H)]} - y\right) = P(Q)\, f(Q,y) \tag{14}$$

To illustrate the qualitative validity of eq 14 in view of these approximations, we have studied the distillation profile $y(n)$. We find that $y(n)$ decreases monotonically with n and that for most values of heat flow $y(n)$ exhibits an inflection point between the feed and the condenser (see Appendix for details). This is in agreement with the distillation profile of many typical distillation processes [*3*].

Encouraged by this fact we now proceed with the evaluation of $N(q)$, the number of required plates between the feed and the condenser. It is of course sufficient for our purposes to continue to deal only with the rectifying part of the column. We can integrate eq 14 for fixed heat flow q and fixed system/process parameters α, H, ϵ, x_D, x_F (or $y_F = y^{eq}(x_F)$), and D. The exact result is

$$N(q) = -\int_{y_F}^{x_D} \frac{dy}{P(q)\, f(y,q)} = \frac{-1}{P(q)}\int_{y_F}^{x_D} \frac{dy}{f(y,q)}$$
$$= \frac{1}{P(q)}(N^*(q)) = \frac{1}{2P(q)}\left[\frac{qa_1 + a_2}{w} \times \ln\left(\frac{qa_6 + a_7 + a_8 w}{qa_6 + a_7 - a_8 w}\right) - \ln\left(\frac{qa_9 + a_{10}}{qa_{11} + a_{12}}\right)\right] \quad (15)$$

with $w = (q^2 a_3 + q a_4 + a_5)^{1/2}$. Here a_1 through a_{12} are constants:

$$a_1 = \alpha + 1, \quad a_2 = -\{H[1 + (\alpha - 1)x_D] + \alpha\epsilon x_D\},$$
$$a_3 = (\alpha - 1)^2, \quad a_4 = 2(\alpha - 1)\{H[1 - (\alpha - 1)x_D] - \alpha\epsilon x_D\}, \quad a_5 = \{H[1 + (\alpha - 1)x_D] + \alpha\epsilon x_D\}^2,$$
$$a_6 = (\alpha - 1)(x_D + y_F - 2x_D y_F),$$
$$a_7 = [H(x_D + y_F) + 2\epsilon x_D y_F][1 + (\alpha - 1)x_D] - \alpha x_D[2H + \epsilon(x_D + y_F)], \quad a_8 = (x_D - y_F),$$
$$a_9 = x_D(1 - x_D), \quad a_{10} = -(H + \epsilon x_D)x_D(1 - x_D),$$
$$a_{11} = y_F(1 - y_F), \quad a_{12} = -q_{min} y_F(1 - y_F) = -(H + \epsilon y_F)\frac{[\alpha x_D(1 - y_F) - y_F(1 - x_D)]}{\alpha - 1} \quad (16)$$

The plate efficiency $P(q)$ thus only enters in an average way by increasing $N^*(q)$, the minimum number of plates for perfect trays ($P = 1$), proportionally. As expected, $N^*(q)$ decreases monotonically with q, with the limiting values

$$\lim_{q\to\infty} N^*(q) = \frac{\alpha}{\alpha - 1}\ln\left(\frac{1 - y_F}{1 - x_D}\right) + \frac{1}{\alpha - 1}\ln\left(\frac{x_D}{y_F}\right)$$
$$\lim_{q\to q_{min}} N^*(q) = \infty \quad (17)$$

where

$$q_{min} = (H + \epsilon y_F)\frac{[\alpha x_D(1 - y_F) - y_F(1 - x_D)]}{y_F(1 - y_F)(\alpha - 1)}$$
$$= (H + \epsilon y_F)\frac{x_D - x_F}{y_F - x_F} = (H + \epsilon y_F)(R_{min}^{n_F} + 1) \quad (18)$$

is the minimum heat flow ($q_{min} > q_0 \equiv \epsilon x_D + H$). We introduced the expression $R_{min}^{n_F}$ in order to make contact with the standard definition of minimum reflux ratio which applies for the case $\epsilon = 0$. In general the minimum reflux ratio R_{min} is found by taking the maximum along the entire column of all the "local minimum reflux ratios" up to plate n [*1*],

$$R_{min}^n = \frac{x_D - y_n}{y_n - x_n} \quad (19)$$

For $\epsilon = 0$ this maximum occurs at n_F. In this case the reflux ratio is constant throughout the rectifying part of the column, and

$$q_{min} = (R_{min}^{n_F} + 1)H \quad (20)$$

In general q_{min} can be uniquely related to the reflux ratio at any specified plate, e.g. the condenser, via eqs 4−7. An expression similar to eq 15 is found for the required number of plates in the stripping section.

IV. Multiple Modes of Operation for a Given Column

As noted in section III, if $P(q) \to 0$ for $q \to \infty$, then $N(q) = N^*(q)/P(q)$ will exhibit a global minimum in the interval (q_{min}, ∞). Therefore, the existence of multiple solutions is guaranteed if one considers the whole range of heat flows.

However, even in the realistic operating region, where both heat flow and required number of plates are small, a rapid change of plate efficiency, even if of small magnitude, will produce a local minimum in $N(q)$ along with multiple solutions of the equation $N(q) = N_c$.

A possible cause for such a change could be the entrainment of liquid droplets in the vapor [*1*]. We expect that this phenomenon would become important only above some critical value of the vapor flow. At the onset of entrainment the plate efficiency should decrease rather rapidly and then continue to decline at a slower rate until additional effects (e.g. excessive frothing) strongly reduce the plate efficiency, ultimately close to zero. However, we are only concerned with modeling the behavior of a column which is operated in the region where entrainment first sets in and where the plate efficiency shows a limited drop while remaining nearly constant before and after the change. Such a limited decrease in plate efficiency can conveniently be modeled by assuming that $1/P(q)$ has the following form in that particular region of heat flow values:

$$\frac{1}{P(q)} = f_1 + f_2 \tanh((q - q_{drop})r) \quad (21)$$

with constants f_1, f_2, and r.

In order to show that eq 21 can result in multiple solutions, we consider a numerical example of the separation of a mixture of 60 wt % benzene and 40 wt % toluene into 97 wt % benzene at the condenser with a distillate flow of $D = 100$ mol/s. The appropriate constants are [*1*]

$$\alpha = 2.4, \quad y_F = y^{eq}(x_F) = 0.65, \quad x_D = 0.974,$$
$$H = 7.24 \text{ kcal/mol} = 30.26 \text{ kJ/mol}, \quad \epsilon = 0 \quad (22)$$

resulting in a minimum heat flow of $q_{min} = 18.20$ kcal/mol = 76.08 kJ/mol. We will assume that the plate efficiency changes from 1.0 to 0.91 over a roughly 5% interval around a heat flow value of $q_{drop} = 19$ kcal/mol = 79.42 kJ/mol as illustrated on the right hand scale of Figure 2. The corresponding number of required plates

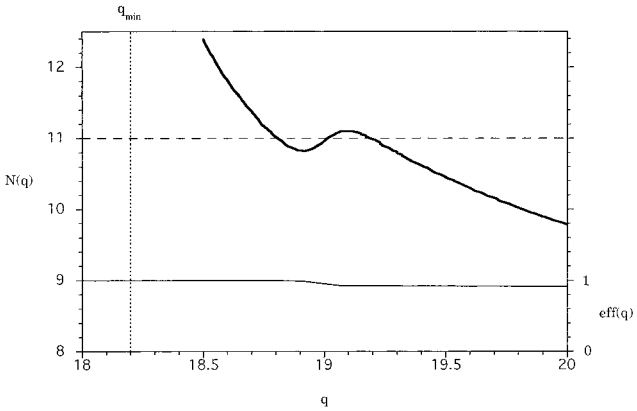

Figure 2. Number of rectification plates $N(q)$ (along left vertical axis) required to achieve a given separation as a function of q, the applied heat flow per mass [kcal/mol]. The initial mixture of 60 wt % benzene and 40 wt % toluene is purified to 97 wt % benzene at the condenser with a distillate flow of 100 mol/s. The plate efficiency eff(q) (right vertical axis) is assumed to change from 1.0 to 0.91 over a roughly 5% interval at a heat flow value of q_{drop} = 19 kcal/mol = 79.42 kJ/mol.

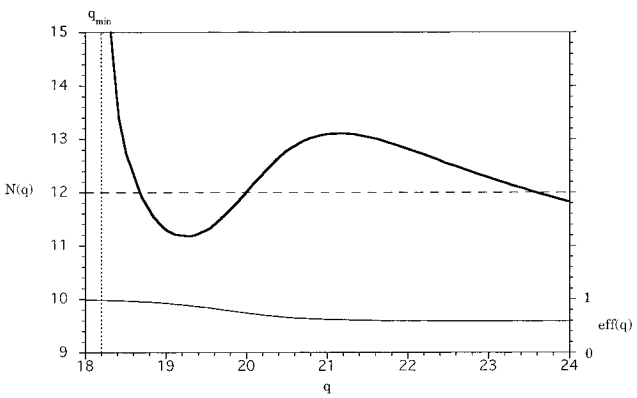

Figure 3. Number of rectification plates $N(q)$ (along left vertical axis) required to achieve a given separation as a function of q, the applied heat flow per mass [kcal/mol]. The initial mixture of 60 wt % benzene and 40 wt % toluene is purified to 97 wt % benzene at the condenser with a distillate flow of 100 mol/s. The plate efficiency eff(q) (right vertical axis) is assumed to change about 40% over a larger interval around a heat flow value of q_{drop} = 19 kcal/mol = 79.42 kJ/mol.

$N(q)$ is shown on the left hand scale of Figure 2. If the rectifying section of the column contains 11 plates (N_c = 11), then there are three values for the heat flow, $q^{(1)}$ = 18.81 kcal/mol = 78.63 kJ/mol, $q^{(2)}$ = 19.02 kcal/mol = 79.5 kJ/mol, and $q^{(3)}$ = 19.19 kcal/mol = 80.21 kJ/mol, that allow this operation of the column.

Clearly, one can achieve similar results by letting a larger change in plate efficiency, e.g. about 40% ($f_1 = 1$, $f_2 = 0.7$), occur over a larger interval of heat flow values (r = 1 mol/kcal = 0.239 mol/kJ, q_{drop} = 20 kcal/mol = 83.6 kJ/mol). Then, for example, a column with 12 plates (N_c = 12) will show three operating modes, $q^{(1)}$ = 18.67 kcal/mol = 78.04 kJ/mol, $q^{(2)}$ = 20.00 kcal/mol = 83.6 kJ/mol, and $q^{(3)}$ = 23.59 kcal/mol = 98.61 kJ/mol, farther separated from one another, as shown in Figure 3.

V. Discussion

In the preceding section we have calculated the number of plates required for a specific distillation process as a function of heat flow, $N(q)$. It was shown explicitly that several values of heat flow q can exist which produce the same output of a given distillation column with a fixed number of plates N_c. Of course, we must always address the question whether the model we have used in the calculation is sufficiently refined, i.e. could it happen that additional imperfections of the column and/or nonidealities of the mixture might invalidate our conclusions?

Let us consider the most important sources of potential problems:

(a) The plate efficiency decreases only very slowly for heat flows in the typical region of operation. Clearly, if in the region of interest $P(q)$ decreases so slowly with q that the relative decrease of the number of plates is always outpacing the relative drop in the efficiency, $(dN^*/dq)/N^* < (dP/dq)/P$, then $N(q) = N^*/P$ decreases monotonically, and no local minimum exists. If this is the case, multiple modes are not expected.

(b) The mixture is nonideal, the heat of mixing is nonnegligible, or the specific heats contribute significantly to the enthalpy flow. If one of these problems occurs, the system of difference equations is more difficult to solve since T_n can no longer be ignored. Nevertheless, the heat flow is still a conserved quantity, and as long as the column can be operated at all, we can still introduce the plate efficiency independently of the plate number,

$$y_n - y_{n+1} = P_n[y^{eq}(T_n(y_{n+1}),x_n(y_{n+1})) - y_{n+1}] = P(q)\, f(y_{n+1}) \quad (23)$$

i.e. we can, in principle, solve the system of equations for perfect plates first and afterward introduce the plate efficiency. Consequently, $N(q) = N^*(q)/P(q)$, as before. If $N^*(q)$ already exhibits local minima, then, of course, multiple solutions are possible. If $N^*(q)$ decreases monotonically, as in the simpler case, then the arguments of section II show that multiple solutions are possible for sufficiently rapidly changing $P(q)$.

(c) Imperfections of the column, e.g. heat leaks or pressure drops. If these imperfections can be incorporated into the plate efficiency, they obviously pose no problem since they do not change the general structure of the problem.

Of more interest is the fact that heat leaks can change the enthalpy flow along the column. This would result in a variation of the plate efficiency $P(q)$ throughout the column. A similar variation of the plate efficiency can also occur; it is not a simple function of heat flow but instead of the material (liquid/vapor) flow, $P_n = P(V_n)$. We recall that the liquid and vapor flows vary even for an otherwise perfect column and are only constant if $\epsilon = 0$ and $C_{V,L} = 0$, unless the effects of ϵ, $C_{V,L} \neq 0$ counteract each other to a certain degree justifying the approximation V_n = constant. Therefore, the plate efficiencies will be different in different regions of the column, such that generally regions with large flows have a lower efficiency than those with smaller flows. The situation is turned around, if the minimum heat flow of the column is very small, because then an increase of q can actually improve the efficiency, since the stronger material flows will lead to mild frothing and thus increase the interaction between vapor and liquid. In either case, the last equality in eq 23 or eq 14 will no longer be true.

However, the formula $N(q) = N^*(q)/P(q)$ will still hold in an average sense, i.e. by replacing $P(q)$ by $P_{average}(q)$. This is appropriate since the average plate efficiency of all the plates taken together will still decrease upon an increase of heat flow as long as the efficiency of the

individual plates decreases. If we assume that the plates are physically identical, then the variation of the heat/material flow along the column will result in a series of small drops in the average plate efficiency rather than one major change as the heat flow increases. Thus the change in the average plate efficiency will be spread out over a somewhat larger range of heat flow values compared to the change of an individual plate.

Nevertheless, this effect is not very large, since, for example, the variation of vapor flow throughout the column typically is only a few percent of the total flow. In order to estimate this variation, we note from eqs 5−7 and the fact that usually $\epsilon \ll H$ that

$$V_{n+1} = \frac{Q}{H + \epsilon y_{n+1}} \approx \frac{Q}{H}\left[1 - \frac{\epsilon}{H} y_{n+1} + O\left(\left(\frac{\epsilon}{H}\right)^2\right)\right] \tag{24}$$

Therefore the relative change of V_n between feed and condenser is found to be small as long as $\epsilon \ll H$:

$$\frac{V_{n_F} - V_1}{V_1} = \frac{\left(1 - \frac{\epsilon}{H} y_F\right) - \left(1 - \frac{\epsilon}{H} x_D\right)}{1 - \frac{\epsilon}{H} x_D} \approx \frac{\epsilon}{H}(x_D - y_F) \ll 1 \tag{25}$$

Thus the general picture as described in section II still applies if we reinterpret $P(q)$ as the average plate efficiency during the process: A rapid change in the average plate efficiency causes an increase in the number of required plates, thus leading to the possibility of multiple operating modes.

Clearly, there are other imperfections and nonidealities we have not considered. Nevertheless, our results indicate that the existence of multiple operating modes for distillation columns should be quite common if the column is operated in a region of heat flows where the plate efficiency decreases rather rapidly.

Acknowledgment

We would like to thank Prof. Vladimir Orlov and Prof. Sten Bay Jørgensen for valuable discussions. This work was supported by the EFP-90 program from the Danish Directorate of Energy.

Appendix

Equation 14 is a differential equation that approximates the difference equation, eq 13. We will here justify that eq 14 generates solutions $y(n)$ which correspond to observed distillation profiles.

First we determine that $-\mathrm{d}y/\mathrm{d}n > 0$, i.e. the purity of component one increases toward the condenser as desired. We can write eq 14 as

$$-\mathrm{d}y/\mathrm{d}n = a/b$$

with

$$a \equiv \alpha[Qy - x_D D(\epsilon y + H)] - yb$$

$$b \equiv Q - D(\epsilon y + H) + (\alpha - 1)[Qy - x_D D(\epsilon y + H)] \tag{A1}$$

We find that $b > 0$ since

$$Q - D(\epsilon y + H) = (V - D)(\epsilon y + H) > 0 \tag{A2}$$

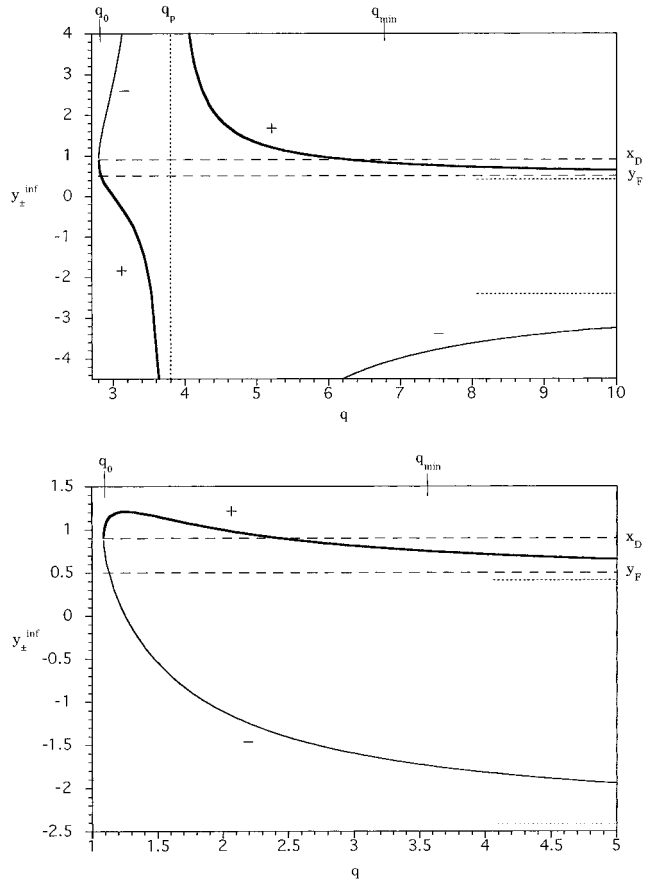

Figure 4. Plots showing the location of inflection points in the concentration profile of the rectification part of the column as a function of heat flow q [kcal/mol] for given values of x_D and y_F. The markers "+" and "−" refer to the two possible inflection points $y_\pm^{\mathrm{inf}}(q)$ of which only one ("+") lies in the physically relevant region. The dotted lines indicate the limiting values $y_\pm^{\mathrm{inf}}(q\to\infty) = (-1 \pm \sqrt{\alpha})/(\alpha - 1)$. The cases $\epsilon > \epsilon_1$ and $\epsilon < \epsilon_1$ are shown separately in Figure 4a,b, respectively.

and

$$Qy - x_D D(\epsilon y + H) = (yV - x_D D)(\epsilon y + H) > 0 \tag{A3}$$

This follows from eqs 5−7 and the fact that $\alpha > 1$, $H > 0$, and $\epsilon > -H$ for any ideal binary mixture. Similarly, since

$$\alpha = \frac{y^{\mathrm{eq}}(x)(1 - x)}{x[1 - y^{\mathrm{eq}}(x)]} \tag{A4}$$

and

$$yV - x_D D = xL \qquad \text{and} \qquad y^{\mathrm{eq}}(x) > y \tag{A5}$$

we find that

$$a = L(\epsilon y + H)\frac{(y^{\mathrm{eq}}(x) - y)(1 - x)}{1 - y^{\mathrm{eq}}(x)} > 0 \tag{A6}$$

Thus $-\mathrm{d}y/\mathrm{d}n > 0$, i.e. the purity of component one increases toward the condenser. We note that the value of heat flow that ensures that $V > D$ is given by $Q = q_0 D = D(\epsilon x_D + H)$.

Next we determine the conditions under which $y(n)$ has an inflection point between the feed point and the condenser. This is a common feature of distillation processes and is indicative of the stability of the process with respect to perturbations in, for example, the heat

flow/feed flow during the operation of the column. An inflection point is determined by $d^2y/dn^2 = 0$. Since $dy/dn \neq 0$, this is equivalent to $(d/dy)(dy/dn) = 0$. Solving the resulting quadratic equation, we find two possible inflection points:

$$y_{\pm}^{\mathrm{inf}} = \frac{(q_1 - q) \pm \sqrt{\alpha q(q - q_0)}}{(\alpha - 1)(q - q_{\mathrm{p}})}$$

$$\text{with} \quad q_0 \equiv \epsilon x_{\mathrm{D}} + H, \quad q_1 \equiv H[1 + (\alpha - 1)x_{\mathrm{D}}], \quad q_{\mathrm{p}} \equiv \epsilon \frac{[1 + (\alpha - 1)x_{\mathrm{D}}]}{(\alpha - 1)} \tag{A7}$$

$$\text{where} \quad q_{\mathrm{p}} \begin{cases} > q_0 \text{ if } \epsilon > \epsilon_1 \\ < q_0 \text{ if } \epsilon < \epsilon_1 \end{cases} \quad \text{and} \quad \epsilon_1 \equiv H(\alpha - 1)$$

In all cases the minimum heat flow for achieving the desired purity is $q_{\mathrm{min}} > q_{\mathrm{p}}, q_0$. We note that $y_{\pm}^{\mathrm{inf}}$ are real when $q > q_0$, but that one inflection point y^{inf} is always situated in the unphysical part of the plane. Furthermore, there is a simple pole at $q = q_{\mathrm{p}}$, which is only of relevance if $\epsilon > \epsilon_1$. The limiting values of y^{inf} are

$$\lim_{q \to q_0} y_{\pm}^{\mathrm{inf}} = x_1 \tag{A8a}$$

with the slope equal to $\pm\infty$ depending on the value of ϵ relative to ϵ_1, while

$$\lim_{q \to \infty} y\pm^{\mathrm{inf}} = \frac{-1 \pm \sqrt{\alpha}}{\alpha - 1} \tag{A8b}$$

with slope equal to $0^{\pm}$, depending on the values of ϵ, α, and x_{D}.

In Figure 4 we plot $y_{\pm}^{\mathrm{inf}}(q)$ for $\epsilon > \epsilon_1$ (Figure 4a) and $\epsilon < \epsilon_1$ (Figure 4b). Note that, whereas for most choices of parameters, we find the inflection point y_{+}^{inf} in the interval $(0,x_{\mathrm{D}})$ in the physically interesting region $q > q_{\mathrm{min}}$, combinations of parameters do exist where this is not the case. In addition, for any set of parameters there is always some interval of heat flows q for which both inflection points lie outside the physically relevant interval $(0,x_{\mathrm{D}})$. For reasons of space limitations we will not discuss the dependence of this interval on the parameters of the distillation process since it is quite complicated.

One can treat the stripping section of the distillation column analogously, and one finds that again two potential inflection points exist. The curves of $\hat{y}_{\pm}^{\mathrm{inf}}(q)$ are qualitatively very similar to those presented in Figure 4, but the values of q_0, q_1, etc. are changed, of course.

Literature Cited

(1) Badger, W. L.; McCabe, W. L. *Elements of Chemical Engineering*; McGraw-Hill: New York, 1936.

(2) Robinson, C. S.; Gilliland, E. R. *Elements of Fractional Distillation*; McGraw-Hill: New York, 1950.

(3) King, C. J. *Separation Processes*; McGraw-Hill: New York, 1971.

(4) Tondeur, D.; Kvaalen, E. *Ind. Eng. Chem. Res.* **1987**, *26*, 50.

(5) Tsirlin, A. M.; Kazakov, V. A.; Berry, R. S. *J. Phys. Chem.* **1994**, *98*, 3330.

(6) Bejan, A. *Entropy Generation through Heat and Fluid Flow*; Wiley: New York, 1982.

(7) Mullins, O. C.; Berry, R. S. *J. Phys. Chem.* **1984**, *88*, 723.

(8) Rawlings, J. B., Ed. *Preprints of Dycord+'95, 4th IFAC Symposium on Dynamics and Control of Chemical Reactors, Distillation Columns and Batch Processes*; Danish Automation Society: Copenhagen, 1995.

(9) Kienle, A.; Marquardt, W. *Chem. Eng. Sci.* **1991**, *46*, 1757.

Received for review November 6, 1995
Revised manuscript received April 9, 1996
Accepted April 10, 1996[⊗]

IE950675O

[⊗] Abstract published in *Advance ACS Abstracts*, May 15, 1996.